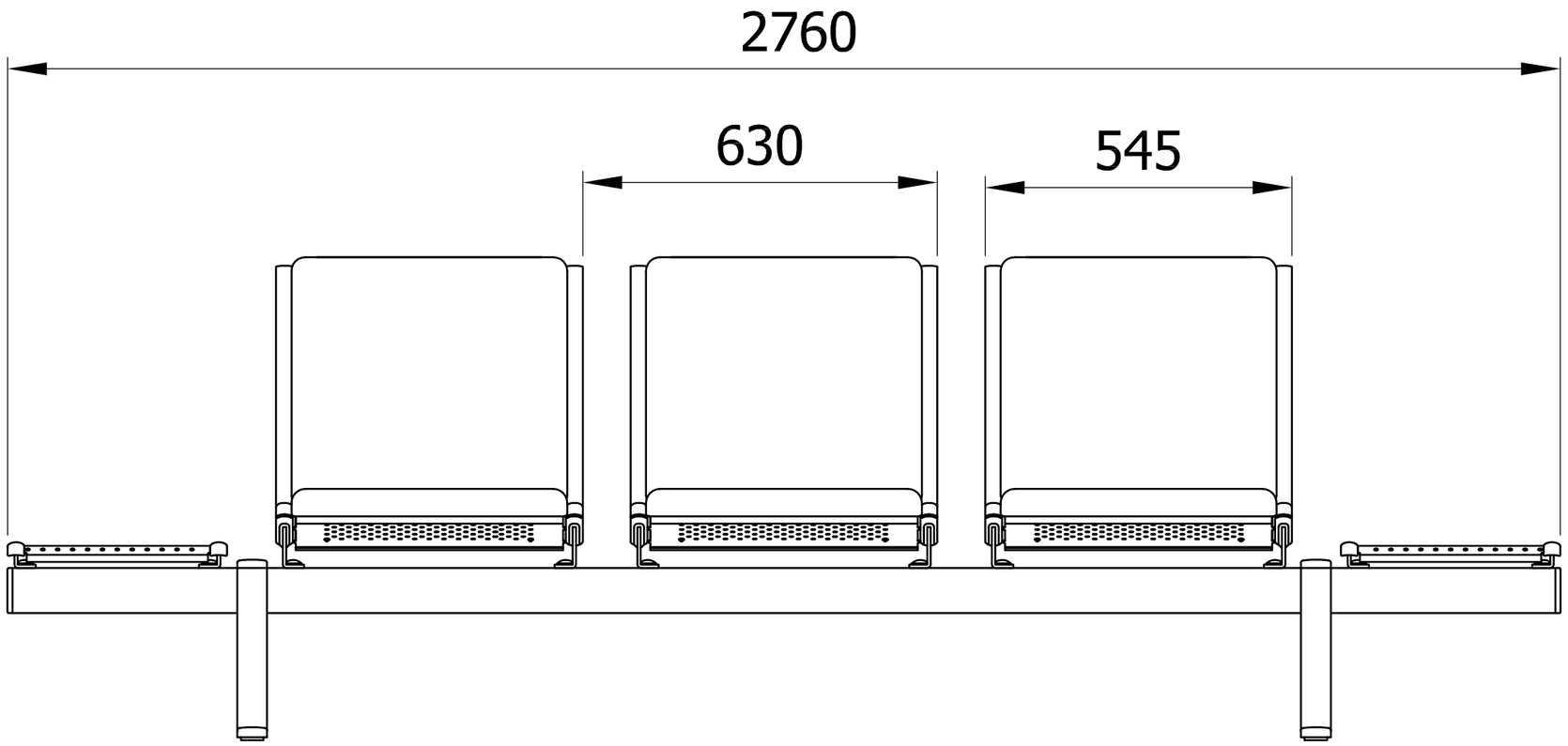

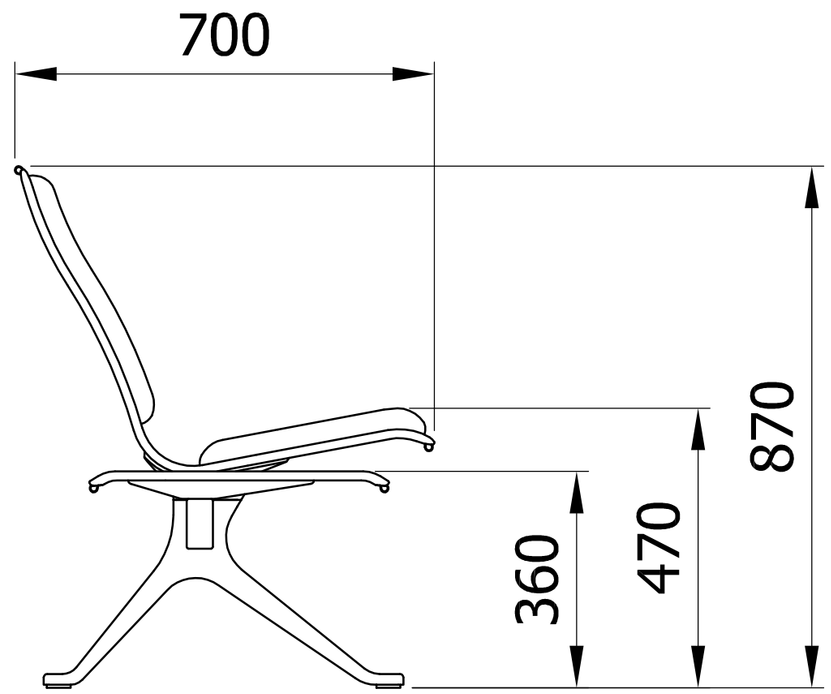

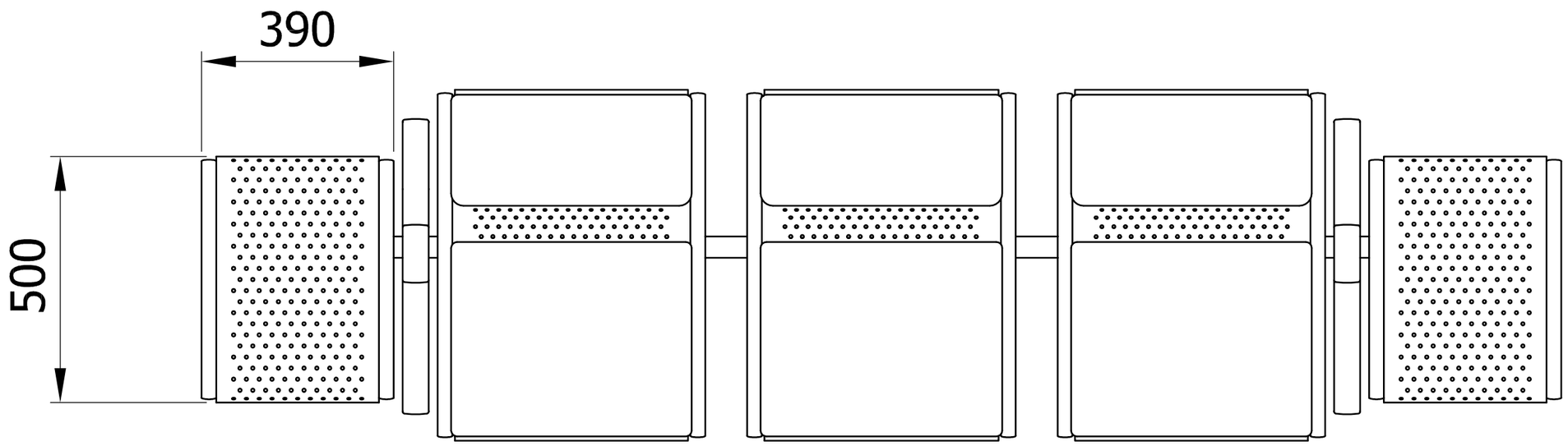

2 STEEL TABLES + 3 SEATS + 2 LEGS

FLY II PU PADS

MANUFACTURER: PHP REAL, POLAND

REAL